The Drive & Control Company

Rexroth
Bosch Group

Directional control and proportional directional valves with IO-Link interface

4WRPEH6_3X
4WRPEH10_3X
4WRPE6_3X
4WRPE10_3X
4WRLE_4X

Operating instructions
RE 29118-B/02.2022

Replaces: 12.2021
English

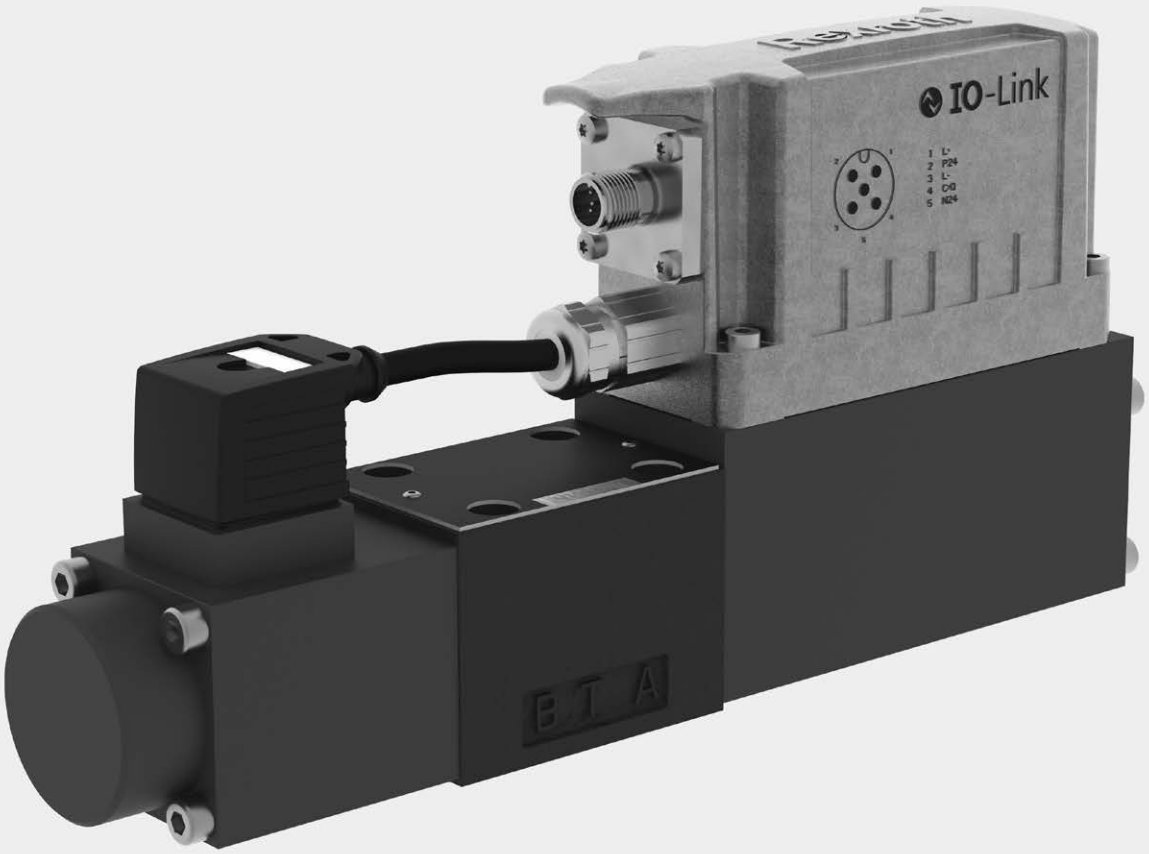

The data specified serves to describe the product. If information on the use of the product is given, it is only to be regarded as application examples and recommendations. Catalog information does not constitute warranted properties. The information given does not release the user from the obligation of own judgment and verification. Our products are subject to a natural process of wear and aging.

The cover shows an example configuration. The product supplied may therefore differ from the figure shown.

The original operating instructions were prepared in German.

Contents

1 About this documentation

1.1 Validity of the documentation

This documentation applies to the following valves with IO-Link interface.
Direct actuated directional control valve with IO-Link interface:
• 4WRPE6-**30**/..L1
• 4WRPE10-**31**/..L1
• 4WRPE10EA-**31**/..L1
• 4WRPEH10-**31**/..L1
• 4WRPEH6-**32**/..L1
Pilot-operated directional control valve with IO-Link interface:
• 4WRLE...E-**43**/..L1

The list above shows the **minimum series indices** of the valve types, for which the functions (see chapter 2.7.1) described in these operating instructions are valid. For this and all subsequent series, the safe shut-off extension (chapter 2.7.1) is integrated. For valves of lower series, this function is not available and these valves may therefore not be used for safe shut-offs. The relevant series index of your valve is shown on the nameplate (see chapter 5.2.1, valve nameplate, “field 3”).

This documentation is intended for assemblers, operators, service engineers and system end-users.
This documentation contains important information on the safe and proper assembly, transport, commissioning, operation, use, maintenance, disassembly and simple troubleshooting of the product.

▶ You should read this documentation thoroughly and in particular chapter 2 "Safety instructions" and chapter 3 "General information on damage to property and damage to the product" before working with the product.

1.2 Required and amending documentation

▶ The product must not be commissioned until you have been provided with the documentation marked with the book symbol 🕮 and you have understood and observed it. Bosch Rexroth data sheets are available online at `www.boschrexroth.com/mediadirectory`

Table 1: Required and amending documentation

	Title	Document number	Document type
🕮	System documentation from the system manufacturer		
	Directional control valves, direct operated, with electrical position feedback, type 4WRPEH6	29121	Data sheet
	Directional control valves, direct operated, with electrical position feedback, type 4WRPEH10	29038	Data sheet
	Directional control valves, direct operated, with electrical position feedback, type 4WRPE10	29122	Data sheet
	Directional control valves, direct operated, with electrical position feedback, type 4WRPE6	29118	Data sheet
	Directional control valves, pilot-operated, with electrical position feedback, type 4WRLE...	29123	Data sheet
🕮	Directional control valves with electrical position feedback and IO link interface	29400-PA	Parameter description
	Declaration of conformity according to EMC Directive 2014/30/EU		Available from Bosch Rexroth on request

Title	Document number	Document type
Reliability characteristics $MTTF_D$ regarding the functional safety according to EN ISO 13849	08012	Data sheet

1.3 Representation of information

Consistent safety instructions, symbols, terms and abbreviations are used in this documentation so that you can quickly and safely work with the valve described. For better understanding, they are explained in the following sections.

1.3.1 Safety instructions

In this documentation, safety instructions are included in chapter 2.6 "Product-specific safety instructions" and in chapter 3 "General information on damage to property and damage to the product" and whenever sequences of actions or instructions are explained which bear the risk of personal injury or damage to property. The described hazard avoidance measures must always be observed.

Safety instructions are structured as follows:

⚠ SIGNAL WORD

Type and source of danger!
Consequences in case of non-compliance
- Hazard avoidance measures
- <Enumeration>

- **Warning sign:** Draws attention to the danger
- **Signal word:** Identifies the degree of danger
- **Type and source of danger:** Specifies the type and source of danger
- **Consequences:** Describes the consequences of non-compliance
- **Precaution:** Specifies how the danger can be prevented

Table 2: Risk classes according to ANSI Z535.6-2011

Warning sign, signal word	Meaning
⚠ DANGER	Indicates a dangerous situation which will cause death or severe injury if not avoided.
⚠ WARNING	Indicates a dangerous situation which may cause death or severe injury if not avoided.
⚠ CAUTION	Indicates a dangerous situation which may cause minor or medium (personal) injury if not avoided.
NOTICE	Damage to property: The product or the environment could be damaged.

1.3.2 Symbols

The following symbols indicate notes which are not safety-relevant but increase the comprehensibility of the documentation.

Table 3: Meaning of the symbols

Symbol	Meaning
ℹ	If this information is not observed, the product cannot be used and/or operated optimally.
▶	Individual, independent action
1. 2. 3.	Numbered instruction: The numbers indicate that the actions must be carried out one after the other.

1.3.3 Designations

The following designations are used in this documentation:

Table 4: Designations

Designation	Meaning
IO-Link	IO-Link is a communication system for connection of intelligent sensors and actuators
RE xxxxx	Rexroth document in English language

1.3.4 Abbreviations

The following abbreviations are used in this documentation:

Table 5: Abbreviations

Abbreviation	Meaning
CCF	Common Cause Failure
DC_{avg}	Average Diagnostic Coverage according to EN ISO 13849-1
I/O	Input/output
$MTTF_d$	Mean time to dangerous failure
PC	Personal Computer
PELV	Protective Extra-Low Voltage
PFH	Probability of dangerous failure per hour
PL	Performance Level according to EN ISO 13849-1
SELV	Separated extra-low voltage
PLC	Programmable Logic Control

2 Safety instructions

2.1 General information on this chapter

The valves with IO-Link interface described below have been manufactured according to the generally accepted codes of practice. However, there is still the danger of personal injury and/or damage to property if you do not observe this chapter and the safety instructions in this documentation.

- ▶ Read this documentation completely and thoroughly before working with the product.

- Keep this documentation in a location where it is accessible to all users at all times.
- Always include the required documentation when you pass the valve on to third parties.

2.2 Intended use

A valve with IO-Link interface is a valve with electrical control for use in one and two-channel safety applications of up to cat. 3, PL d according to EN 13849-1 as switch-off element for one channel.
Depending on the application and the requirements of work equipment-related standards according to EN 13849-1, the user must provide appropriate monitoring/plausibility checks which comply with the required diagnostic coverage DC_{avg} using a higher-level control.
The valve is exclusively intended for integration into a machine or system or to be assembled with other components to form a machine or system. The product may be commissioned only if it is integrated in the machine/system for which it is designed. The technical data indicated in the operating conditions and the performance limits must be observed.

The valve with IO-Link interface may be used as follows:
• To control position, pressure, force, velocity, pressure differential and flow

When using the device, a higher-level control logic with corresponding I/O components is required for holistic control of the machine motion sequence and safety-related monitoring in connection with the valve with IO-Link interface.
The valve may not be used in potentially explosive atmospheres. The product is only intended for professional use and not for private use.
Intended use includes having read and understood this documentation completely, especially chapter 2 "Safety instructions".

2.3 Improper use

Any use deviating from the intended use is improper and thus not admissible. Improper use voids any warranty claims. It is also regarded as improper use if the valve is operated outside the indicated performance limits and operating conditions, especially the required environmental conditions.
Bosch Rexroth AG does not assume any liability for damage caused by improper use. The user assumes responsibility for all risks surrounding improper use.

2.4 Qualification of personnel

The activities described in this documentation require basic knowledge of electric installation, control technology, programming and hydraulics as well as knowledge of the appropriate technical terms. In order to ensure safe use, these activities may only be carried out by a corresponding expert or an instructed person under the direction and supervision of an expert.
Experts are those who can recognize potential dangers and apply the appropriate safety measures due to their professional training, knowledge and experience, as well as their understanding of the relevant conditions pertaining to the work to be undertaken. An expert must observe the relevant specific professional rules and have the necessary hydraulic expert knowledge.
Hydraulic expert knowledge means, among other things:

- Reading and completely understanding hydraulic schemes,
- In particular, completely understanding the correlations regarding the safety equipment and
- Having knowledge of the function and set-up of hydraulic components.

Bosch Rexroth offers training measures in specific fields. An overview over the training contents can be found online at:
`https://www.boschrexroth.com`

2.5 General safety instructions

- Observe the valid regulations on accident prevention and environmental protection.
- Observe the safety regulations and provisions of the country in which the product is used/applied.
- Exclusively use Rexroth products in technically perfect condition.
- Observe all notes on the product.
- Persons who assemble, operate, disassemble or maintain Rexroth products must not be under the influence of alcohol, drugs or pharmaceuticals that may affect their ability to react.
- Only use original Rexroth accessories and spare parts in order to prevent hazards to persons due to unsuitable spare parts.
- Comply with the technical data and environmental conditions specified in the product documentation.
- The installation or use of inappropriate products in safety-relevant applications could result in unintended operating states when being used which in turn could cause personal injuries and/or damage to property. Therefore, only use a product for safety-relevant applications if this use is expressly specified and permitted in the documentation of the product, or if the safe suitability of the product in the application is confirmed by a separate conformity assessment procedure, e.g. in explosion protection zones or in safety-related parts of control systems (functional safety).
- Do not commission the product until you can be sure that the end product (for example a machine/system) where the Rexroth products are installed

complies with the country-specific provisions, safety regulations and standards of the application.

- Please observe the safety-relevant information and risk specifications in the operating instructions of the manufacturer of the connected hydraulic system before commissioning the control with a hydraulic system.
- Please observe the general installation and safety instructions when working on electric systems.
- The information given in the product documentation with regard to the use of the supplied components are only application examples and recommendations. The machine manufacturer and system installer must check the suitability of the supplied components and the information given in this documentation with regard to their use self-dependently for his individual application and adjust it to the safety instructions and standards valid for his application, and carry out the required measures, changes and amendments.
- Technical data as well as connection and installation conditions are available in the product documentation and must be imperatively observed.
- In case of faults impairing the safety and changes in the operating behavior, shut down the valve immediately and report the faults to the responsible personnel.
- Do not change or modify the valve except for the pilot oil supply of the pilot-operated valves 4WRLE_4X.

2.6 Product-specific safety instructions

⚠ WARNING

Non-compliance with functional safety!
Valves control movements in machines or systems. In case of mechanical and electric faults, e.g. failure of the energy supply, persons may be caught by the system, kicked away or bruised.

- ▶ During set-up of your circuit, observe the applicable standards on functional safety, e.g. EN ISO 13849-1.

Dangerous movement!
It is not allowed for persons to stay within the range of motion of machines and machine parts. The following are examples of possible measures against unintended access of persons:

- Protective fences
- Protective grids
- Protective covers
- Light barrier

- ▶ If persons must access the danger zone during active control, monitoring or measures must be provided for personal safety which are superior to the system. These measures must be provided according to the specific data of the system and on the basis of the risk and error analysis of the system manufacturer/user. In this connection, the safety provisions applied for the system must be taken into account.
- ▶ In case of faults impairing the safety and changes in the operating behavior, shut down the valve immediately and report the faults to the responsible personnel.

Pressurized system parts and leaking hydraulic fluid!
When working at hydraulic systems with stored pressure energy (accumulator or cylinders working under gravity), valves may even be pressurized after the pressure supply has been switched off. During assembly and disassembly works, valves and related components may fly around and cause personal injuries and/or damage to property. There is moreover the danger of serious injury caused by a powerful leaking hydraulic fluid jet.

- ▶ Ensure before working at the hydraulic product that the hydraulic system is depressurized and the electrical control de-energized.
- ▶ Completely unload the pressure at machines and systems before working at hydraulic products.

Electrostatic processes!
Valve electronics are sensitive to electrostatic charging and can be damaged. This can lead to uncontrolled reactions at the valve.

- ▶ During assembly and troubleshooting of valves with integrated electronics, observe applicable ESD regulations.
- ▶ Do not touch any electric pins. Do not remove the electronics housing.

⚠ WARNING

Incorrect connection!

Risk of injury caused by electric shock!

- The valve may only be connected by or under the supervision of a specialized electrician.
- Switch off the voltage supply before all maintenance, repair or installation works and secure it against restarting.
- Provide for proper, safe PE connection.
- As supply voltage of the valve with IO-Link interface, functional low voltages with electric separation (PELV or SELV) according to VDE0100, part 410 must be used.
- For the external voltage supply, it must be ensured that, even in error cases, the voltage limitation defined for the valve is not exceeded. PELV power supply units according to EN 60204, section 6.4.2 comply with these requirements.
- Only connect voltages and electric circuits provided with a safe isolation from dangerous voltages. Safe isolation can be achieved with isolation transformers, safe optocouplers or mains-free battery operation.

  Notice:

  When calculating the PFH (probability of dangerous failure per hour) of the safety function, the PFH of the external voltage supply must also be taken into account.

Incorrect mounting!

Mounting of valves with mounting screws of reduced stability, insufficient mounting or fastening at blocks and plates with insufficient stability may lead to components becoming loose and falling down. Consequently, hydraulic fluid may leak and lead to personal injuries and/or damage to property. Valves with high weight may cause bruises or fatal injury. Particular caution applies to valves with suspended installation.

- Completely assemble the valve according to the assembly specifications by means of suitable assembly aids.
- Only assemble the valve at blocks or plates suitable for the weight of the valve.
- Comply with tightening torques and screw stabilities.

Missing equipotential bonding!

Electrostatic processes, an incorrect grounding concept or missing equipotential bonding may lead to malfunctions or uncontrolled movements at the machine and thus cause injuries.

- Provide for correct grounding and proper equipotential bonding.

⚠ WARNING

Penetrating water and humidity!
In case of use in humid or wet environments, water or humidity may penetrate at electrical plug-in connectors or the valve electronics. This case may lead to malfunctions at the valve and to unexpected movements in the hydraulic system which may result in personal injury and damage to property.

- Do not use the valve with IO-Link interface outside or below its intended IP protection class.
- Ensure before the assembly that all seals and caps of the plug-in connections are tight and intact.

Easily inflammable hydraulic fluid!
In connection with fire or other hot heat sources, leaking hydraulic fluid mist may lead to fire or explosions due to defective or incompletely assembled valves and their connections.

- Do not use the valve in areas with open fire and only at a sufficient distance to hot heat sources.

Electro-magnetic processes!
The valve electronics may be damaged if they are interfered with. This can lead to uncontrolled reactions at the valve.

- Exchange valves with defective electronics right away and replace them with a new device or original spare parts.
- The housing of the electronics serves as shielding from electro-magnetic interferences. Do not remove the housing of the electronics.

⚠ CAUTION

Contaminated hydraulic fluid!
Contamination in the hydraulic fluid may cause functional failures e.g. jamming or blocking of nozzles of the valve. In the worst case, this may result in unexpected system movements and thus constitute a risk of injury for persons.

- Ensure adequate hydraulic fluid cleanliness according to the cleanliness classes of the valve over the entire operating range.

Hot surfaces!
Valves may heat up considerably during operation. Skin contact can lead to burns and contact with materials that are flammable or not heat-resistant can lead to damage to property or fire hazard.

- Avoid contact with the valve during operation.
- Allow the valve to cool down sufficiently before touching it or wear protective gloves.
- Keep materials that are flammable or not heat-resistant away from hydraulic valves.
- If necessary, attach protective covers.

Exceeding of maximum temperatures!
Use of the valve outside the intended temperature may lead to functional failures like e.g. overheating of the valve solenoids. In the worst case, this may result in unexpected system movements and thus constitute a risk of injury for persons.

- Only use the safety valve within the intended ambient and fluid temperatures.

Leakage in case of incorrect working temperatures!
Use of the valve outside the intended temperature range may lead to permanent leakage at the valve. Thus, hydraulic fluid in the form of a leaking hydraulic fluid jet may injure persons, lead to damage to property and endanger the environment.

- Only use the safety valve within the intended ambient and fluid temperatures.
- In case of leakage, immediately exchange damaged seal rings or the valve.

Corrosion!
If the valve is used in humid environments or water, the valve and mounting screws may corrode. Thus, the mounting screws and the valves lose their stability and may become loose and thus constitute a risk of injury.

- Use mounting screws with adequate corrosion protection and exchange the mounting screws with serious corrosion damage.
- Provide for adequate corrosion protection and exchange valves with serious corrosion damage at an early stage.

Contact with salt water leads to increased corrosion on the valve. Mounting screws and plug screws as well as moveable components such as hand levers may be chemically corroded and damaged.
Take suitable corrosion protection measures.

2.7 Safety equipment

WARNING

Dangerous movements!
Danger to life, risk of injury or damage to property!
- Only use the approved control spool types specified in the corresponding valve data sheet. Otherwise, secure shut-off of the valve and the related safety function are no longer provided.

2.7.1 Use of the valve with IO-Link interface according to EN13849-1

The valve can be used in systems up to PL d, category 3 according to EN13849-1.
The valve can be used as shut-down element to ensure compliance with the requirements of a secure start inhibitor according to EN 60204 stop category 0.
In two-channel applications, i.e. applications with PL d, cat. 3 according to EN 13849-1, the valve can be used as shut-off channel.
As a precondition, appropriate monitoring/plausibility checks with the required DC_{avg} for the entire application must be provided by the user or programmed into a superior control system.

Safe shut-off with IO-Link

With symbols E, E1-, W and W1-, the valve can be used as shut-off element in applications of categories 1 or 3 with up to PL d in compliance with EN 13849-1.
Depending on the category or application, additional safety measures must be taken according to EN 13849-1 and operating instructions 29118-B must be observed.
In every safety-relevant application, a safe shut-off of the IO-Link-B voltage (pin 2 and 5) must be ensured according to EN 13849-1.
The safe shut-off is not part of the IO-Link valve and must be taken into account for the safe design of the machinery.

Despite all measures taken in terms of plausibility check and monitoring, using the valve involves significant residual risks. These must be evaluated by the machine integrator depending on the individual application. For appropriate evaluation, Bosch Rexroth provides the safety parameters of the valve with IO-Link interface according to EN 13849-1. See chapter 2.7.4 "MTTFd, DC, CCF".

2.7.2 Limits of the safety-related parts

Assessment of the valve with IO-Link interface according to ISO 13849-2:

- Potential failures or unidentified error states of the valve with IO-Link interface always require application-dependent and suitable system-related measures according to EN 13849-1 (see chapter 2.7.1).
- When using the valve with IO-Link interface in compliance with categorie 3 according to EN13849-1, adequate cyclic diagnosis or monitoring of the valve function outside of the valve by the control system must be implemented by the machine integrator. Without suitable diagnostic measures, only cat. B or 1 according to EN13849-1 can be reached.

2.7.3 Residual risks/error states

The following residual risks or error states may occur and must be taken into account by appropriate system-related measures:

- Complete failure of the electronics of the valve
- Faulty output of operating states
- Uncontrolled movement of the valve control spool (may lead to uncontrolled movement of the cylinder)
- Fuse protection in the case of short-circuits in the electronics of the valve with IO-Link interface by means of appropriate protection and design of the supply line (fuse protection against currents >4 A).

2.7.4 $MTTF_d$, DC, CCF

For valves with IO-Link interface, $MTFF_d$ valves can be calculated according to the information specified in the table using the following formula:

$$MTTF_{dGesamt} = \frac{1}{\frac{1}{MTTF_{dHydraulikteil}} + \frac{1}{MTTF_{dAbschaltpfad}} + \frac{1}{MTTF_{dNetzteil}}}$$

Table 6: Information for calculation of the $MTTF_d$ value

Type of actuation	Valve type	$MTTF_d$ values Hydraulic components	Switch-off path	SELV/PELV power supply unit + safe IO-Link terminal	$MTTF_d$ value Valve and electronics switch-off path (without additional components)	Example of total $MTTF_d$ value (for power supply unit + IO-Link terminal with $MTTF_d$ value of 1 mio. h)
Direct actuated valves	**4WRPEH10** **4WRPEH6** **4WRPE6** **4WRPE10**	150 years	1000 years	$MTTF_d$ value depending on manufacturer of power supply unit + safe IO-Link terminal ($MTTF_d$ = approx. 2 x MTBF) e.g. MTBF = 500000 h → $MTTF_d$ value = approx. 1 mio. h (114 years)	130 years	60
Pilot-operated valves	**4WRLE**	75 years	1000 years		69 years	43

The specified MTTFd values are subject to the limitations from RE 08012 (see "Exceptions/limitations" for "admissible spool design; maximum longitudinal spool acceleration" in chapter "Proportional directional valves" on page 5).

The DC depends on the system and on the use of a safety PLC (see chapter 2.2 "Intended use").
By using the valves as intended, a CCF of at least 65 points can be reached.

2.7.5 Limits for the operation

The following operating conditions apply to the valves, see data sheet.

- Ambient temperature range: -20...60 °C
- Supply voltage range 18...36 VDC, see data sheet
- Additional external precautionary measures must be taken against overvoltage, e.g. in the form of fuses and varistors.

Variations may occur depending on the valve used. They can be found in the corresponding valve data sheet. There, you also find the valve-related operating conditions.

2.7.6 Switch-off / switch-on times

The switch-off time generally depends on the valve type used and the hydraulic operating state. The table below lists typical values below the performance limits. The min. switch-on time results from the required run-up time of the electronics (switching on of Class-B voltage) and the time it takes to respond to a command value input with a change in current at the solenoid. It does not correspond to a stable control position (the change in position of the spool is not taken into account in the switch-on time).

Table 7: Typical switch-on and switch-off times

Valve type	Switch-on time	Typical switch-off time
4WRPEH6...-3X	3 ms	< 15 ms
4WRPEH10...-3X	3 ms	< 20 ms
4WRPE6...-3X	3 ms	< 30 ms
4WRPE10...-3X	3 ms	< 45 ms
4WRPE10_EA...-3X	3 ms	< 45 ms
4WRLE10...-4X	3 ms	< 50 ms
4WRLE16...-4X	3 ms	< 50 ms
4WRLE25/27...-4X	3 ms	< 50 ms
4WRLE35...-4X	3 ms	< 200 ms

2.7.7 Connection example/block diagram for IO-Link valves

Category 1

For category 1, the supply voltage of valve pin 2 and 5 must be safely switched off. In this example, this is realized by means of safe limit switches at doors in connection with a safe IO-Link terminal.
The voltage can also be safely switched off via an IO-Link-Master for safe shut-off of the B voltage according to 13849-1.

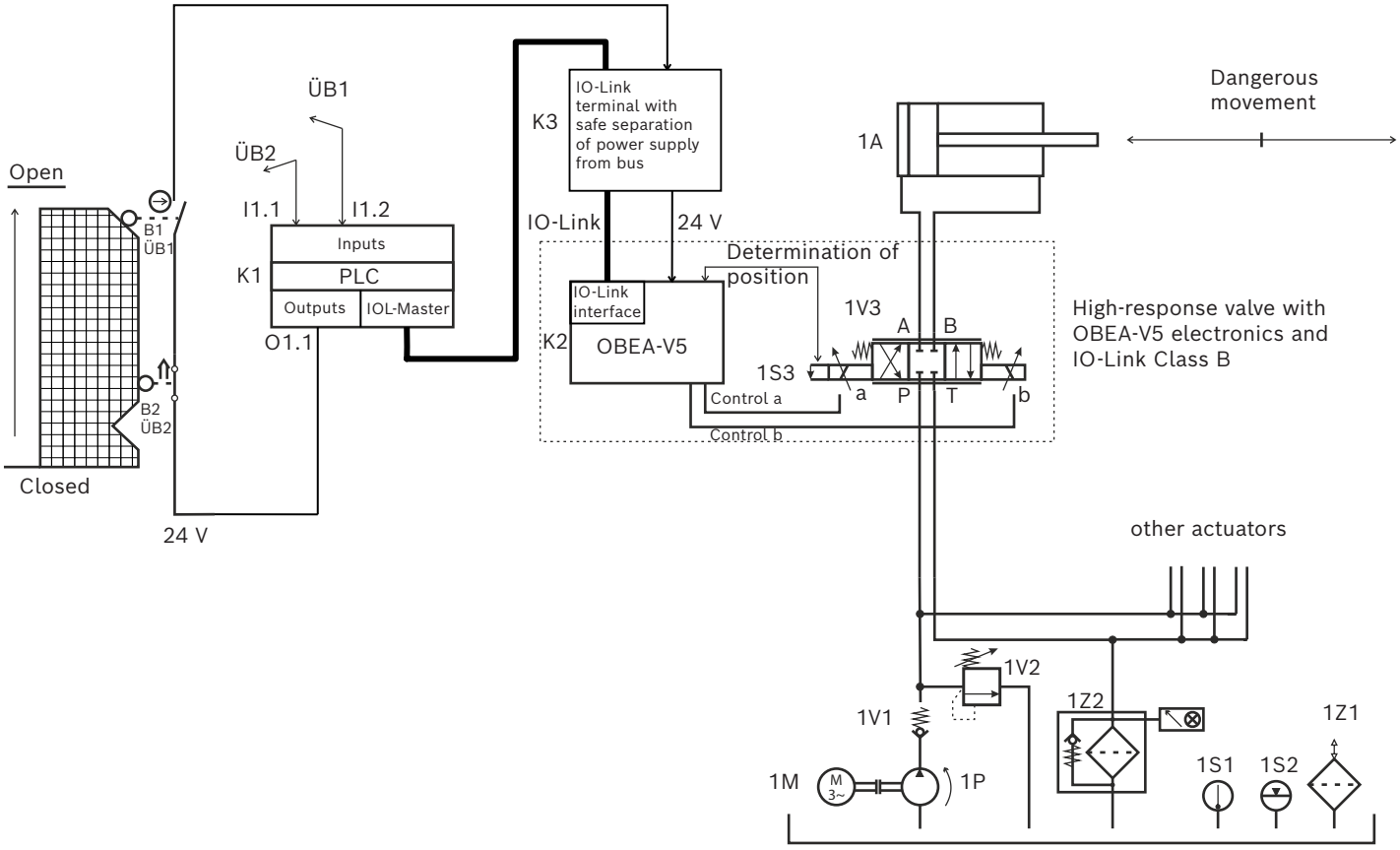

Fig. 1: Category 1 block diagram

Category 3

For use according to category 3 in compliance with EN 13849-1, a second safe switch-off element must be implemented in addition to the valve with OBEA-V5 interface. In the example, this is realized with a position-monitored directional switching valve.

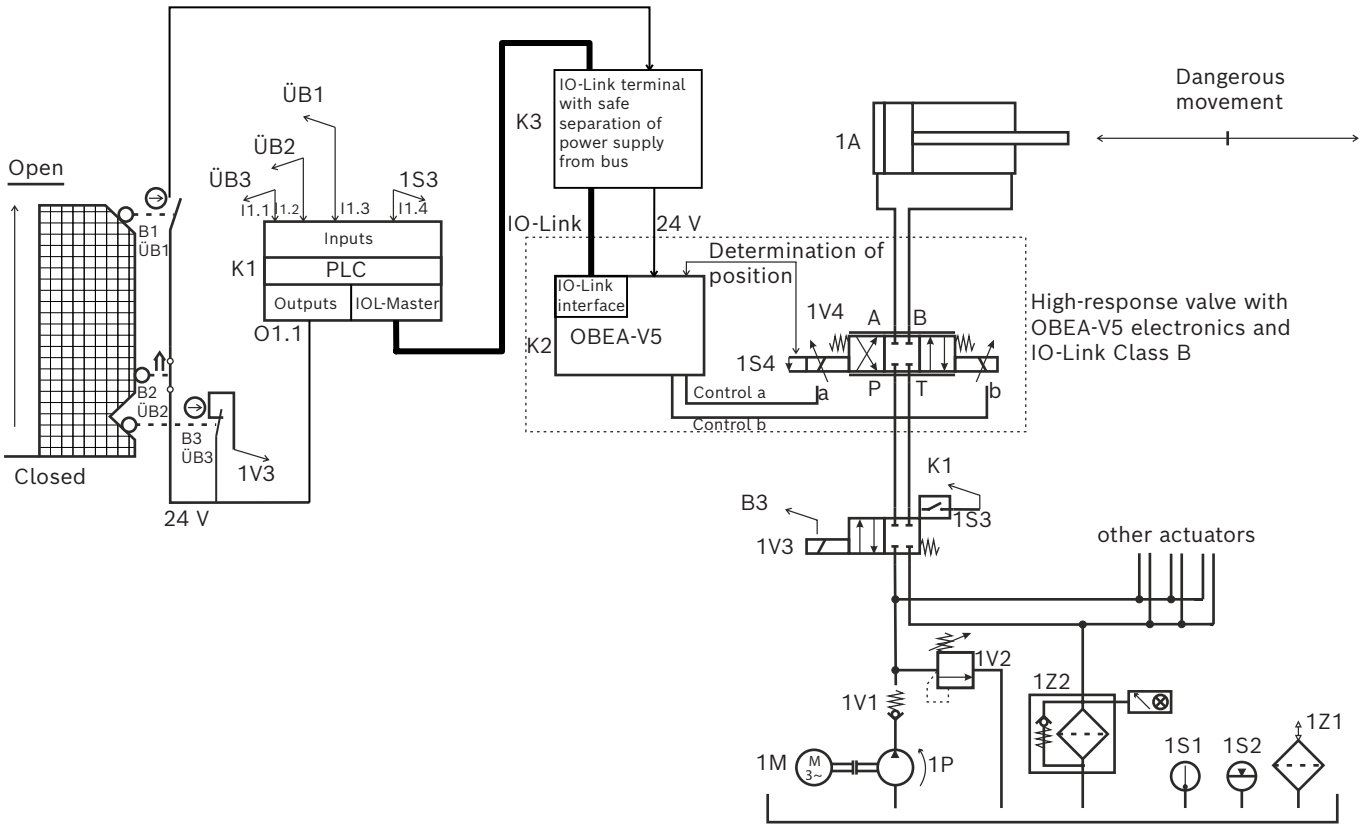

Fig. 2: Category 3 block diagram

2.8 Personal protective equipment

Check specified personal protection for completeness and protective effect and have it available (please observe customer specification and list of personal protection!)

2.9 Obligations of the machine end-user

The operation of installations, systems and machines basically requires the implementation of a holistic IT security concept which is state-of-the-art in terms of technology. Accordingly, Bosch Rexroth products and their properties must be considered as components of installations, systems and machines for their holistic IT security concept.

Unless otherwise documented, Bosch Rexroth products are designed for operation in local, physically and logically secured networks with access restrictions for authorized persons, and they are not classified according to IEC 62443-4-2.

3 General information on damage to property and damage to product

NOTICE

Inadmissible mechanical load!
Impact or shock forces on the valve may damage or even destroy it.
- Never use hydraulic components as handle or step. Do not place/put any objects on top of it.

Dirt and foreign particles in hydraulic components!
Penetrating dirt and foreign particles lead to wear and malfunctions. Safe function of the hydraulic components is no longer ensured.
- During assembly, ensure utmost cleanliness in order to prevent foreign particles such as welding beads or metal chips from getting into the hydraulic lines.
- Do not use linting fabric for cleaning.
- Ensure that no cleaning agents are able to penetrate the hydraulic system.

Hydraulic fluid harmful to the environment!
Leaking hydraulic fluid leads to environmental pollution.
- Immediately remedy possible leakage.
- Dispose of the hydraulic fluid in accordance with the currently applicable national provisions in your country.

Uncontrolled disconnection and connection of plug-in connectors!
Device might be destroyed!
- Before installation works, separate the device from the mains or from the voltage source or de-energize it.
- Do not plug in or pull the electric plug-in connector as long as the voltage supply is activated.

The warranty only applies to the delivered configuration.
The claim to warranty expires if the product is incorrectly assembled, commissioned and operated, not used as intended and/or handled improperly.

4 Scope of delivery

The scope of delivery includes:
• Valve with IO-Link interface

Accessories such as mating connector and cable set are not included in the scope of delivery and must be ordered separately.

- Check the scope of delivery for completeness.
- Check the scope of delivery for possible transport damage, see chapter 6 "Transport and storage".

In case of complaints, please contact Bosch Rexroth AG, see chapter 16.1 "List of addresses".

5 Product information

5.1 Product description

The valve with IO-Link interface is designed for use in rough industrial environments in terms of interference, mechanical vibration, shock and climate resistance.

The IO-Link interface is used for parameterization and diagnosis. The relevant parameters can be found in *"Parameter description RE29400"*. This enables individual parameterizing of the valve according to axis requirements. Communication with the higher-level control is done via an IO-Link-Master. When using the device, a higher-level control logic with corresponding I/O components is required for holistic control of the machine motion sequence and safety-related monitoring in connection with the valve. The IO-Link system must not be used for transmission of safety-related signals.

5.2 Product identification

5.2.1 Information on the name plate of the valve and electronics

For the meaning of the information on the name plates of the valve and IO-Link electronics, please refer to the respectively numbered fields in the following table.

The name plate illustrated below (type 4WRPEH6) serves as general example for the IO-Link valves described in these operating instructions. The position of individual information may differ. However, all name plates of the valves contain the same information.

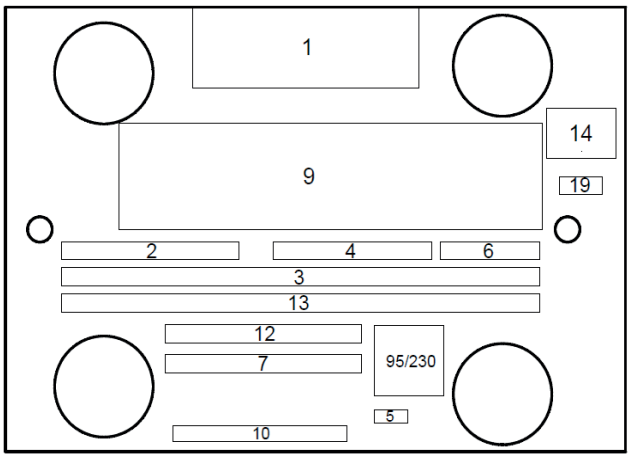

Fig. 3: Name plate of valve 4WRPEH6

Table 8: Information on the name plate of the valve

No.	Type of information
1	Word mark
2	Material number of the valve
3	Type designation
4	Serial number
5	Production plant
6	Date of production
7	Maximum operating pressure
9	Hydraulic symbol according to ISO 1219
10	Designation of origin
12	Production order number
13	Customer material number
14	CE conformity mark
95	Data matrix code
230	QR code

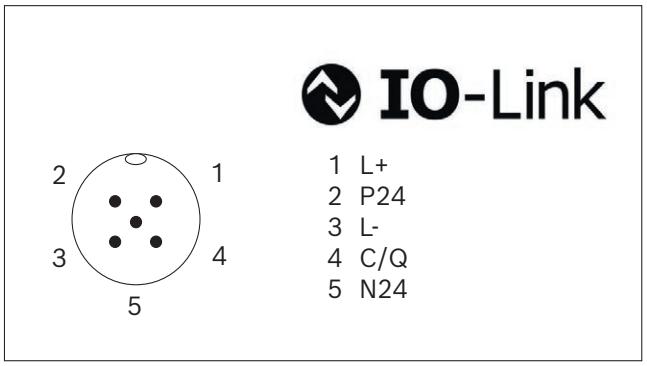

Fig. 4: Name plate of IO-Link electronics

Table 9: Information on the name plate of IO-Link electronics

No.	Type of information
l+	Voltage supply of IO-Link
P24	Voltage supply of valve electronics and power part (current consumption depending on valve)
L-	Reference potential pin 1
C/Q	Data line IO-Link (SDCI)
N24	Reference potential pin 2

Further information on electrical connection and pin assignment can be found in the respective valve data sheet.

6 Transport and storage

There are no special transport instructions for this product. However, always observe chapter 2 "Safety instructions" and comply with the environmental conditions specified in the data sheet for storage and transport.

6.1 Storing the valve with IO-Link interface

The valve is supplied in good order and condition.
Under the following conditions, the valve can be stored up to 12 months:

- Do not store the valve outdoors but in a well-ventilated room.
- Store the valves between +5 °C and +40 °C.
- For the purpose of short-time transportation, the ambient temperature range according to the data sheet shall apply.
- Protect the valve against humidity, particularly ground humidity. Store the valve on a shelf or on a pallet. The relative air humidity must not exceed 65% and there must not be any condensation.
- Ensure that no ozone formation takes place near the storage location.
- Provide for 100% UV protection.
- Store the valve in packaging in order to protect it from dust and dirt.
- All connections at the valve must be closed with cap elements.
- After opening the transport packaging, it must be closed properly again for storage. Use the original packaging for storage.
- Do not remove the covers of the hydraulic ports of the valve before assembly.

In case of storage of more than six months or in case sea transport is necessary, please consult Bosch Rexroth.

7 Assembly

NOTICE

Condensed water!
Risk of short-circuit
- Allow the valve to acclimatize for several hours to prevent formation of condensed water in the valve electronics housing.

Penetrating humidity!
The housing of the valve electronics is closed. However, according to the applicable protection class, fluids may enter and lead to faults and short-circuit. Safe function of the valve can no longer be ensured.
- When working on the valve, always ensure that no fluids can enter the electronics housing.

Major potential differences!
Danger of destroying the valve electronics by connecting or disconnecting plug-in connectors under voltage.
- Switch off the power supply to the relevant system part before assembling the device or when connecting and disconnecting connectors.

7.1 Unpacking
Dispose of the packaging in accordance with the currently applicable national provisions in your country.

7.2 Installation conditions
- For installing the product always observe the environmental conditions specified in the technical data sheet.

NOTICE: The environment must be free from aggressive substances (acids, bases, corrosive agents, salts, metal vapors, etc.) which may enter the device despite compliance with protection class IP 65.
- Before commissioning, make sure that all the seals and caps of the plug-in connections are installed correctly and undamaged to ensure that fluids and foreign particles are prevented from penetrating the product.

7.3 Required tools
No special tools are required for the assembly.

7.4 Recommended accessories
To connect the valves, we recommend using the accessories listed on the corresponding valve data sheet.

7.5 Prior to assembly

- Before assembly of the valve, check compliance of the type designation on the name plate with your order or order number.
- Observe the information on the maximum operating pressure on the name plate.

7.6 Place of installation

The valve should not be installed next to power electronics (e.g. frequency converters, etc.)

7.7 Assembling the valve with IO-Link interface

7.7.1 Mechanical assembly of the valve

⚠ WARNING

Faulty installation of plug screws and lines!

Improperly fastened plug screws and lines may become loose during subsequent operation and fly around due to the pressure. This may cause serious injuries.

- Only pressurize your system after all plug screws and lines have been completely and properly mounted according to the specifications.

⚠ CAUTION

Insufficient installation space!

Insufficient installation space may lead to jamming or abrasions in case of actuation and adjustment work at the valve.

- Provide for sufficient installation space.
- Ensure that actuation, adjustment elements and plug-in connectors are easily accessible.

Leaking hydraulic fluid!

Hydraulic fluid may leak during assembly and disassembly of the valve. This might cause persons to slip or fall.

- Do not remove the protective caps of the valve until assembly.
- After disassembly, seal the hydraulic fluid bores with suitable cap elements.
- Immediately remove hydraulic fluid that has leaked out.

Sharp edges!

Valves may have sharp edges at the valve openings. During transport or assembly/disassembly, cutting or abrasive injuries may result.

- Wear corresponding protective clothing during transport.
- Do not reach into valve openings!

Have sufficiently dimensioned collecting containers, non-linting cloth and medium-binding materials ready in order to collect or bind leaking medium.

The mounting surface of the valve and the subplates must be clean and free from hydraulic fluid.

- Use non-linting fabric for cleaning the subplates.

1. Remove the protective cover from the valve.
2. Ensure correct orientation of the valve. Observe the porting pattern according to the symbol and connection labeling at the valve.
3. Check whether all seal rings are in place and intact.
4. Carefully place the valve on the mounting surface.
5. Use mounting screws according to the dimensions and property classes specified in the data sheet.
6. Ensure that the mounting screws are tightened using the specified tightening torque. For the tightening torques, please refer to the corresponding valve data sheets.
7. Please note that the tightening torques may change if other screw types are used.

7.7.2 Hydraulic connection of the valve

1. Depressurize the relevant system part.
2. Establish all connections observing the operating instructions of the system.
3. Make sure that pipes and/or hoses are connected to all ports and/or that the ports are closed with plug screws.
4. Carry out a special check to make sure that the cap nuts and flanges are correctly tightened at the pipe fittings and flanges.
5. Make sure that all pipes and hose lines and every combination of connection pieces, couplings or connection points with hoses or pipes are checked for their operational safety by a person with appropriate knowledge and experience.

7.7.3 Electrical connection of the valve

⚠ CAUTION

Faulty energy supply!

Danger of damage to property and personal injuries! Faulty energy supply may lead to uncontrolled valve settings. These could result in possible malfunctions or failure of the valve and cause injuries.

- Always connect the grounding connections of the valve with the appropriate grounding system in your installation.
- Only use a power supply unit with safe separation.
- Always comply with the country-specific regulations.

⚠ CAUTION

Improper installation of connectors and cable routing!
Incorrectly secured M12 connectors and cables routed not in compliance with the assembly instructions may become loose during operation and cause damage. This can lead to loss of communication with the valve or failure of valve functions.

- Lay cables and lines so that they cannot be damaged and no one can trip over them.
- Tighten M12 connectors to 1 Nm with a manual torque wrench.
- Use self-locking M12 cables.
- Make sure that cables are secured without radial forces.
- Secure M12 cables after 20 to 30 cm and make sure that there is no relative motion between the fixture and the valve. Before the fixation point, there must not be any cable loops.
- Observe any general information provided by the cable manufacturers for laying of cables.

Missing seals and caps!
Risk of short-circuit! Fluids may enter the valve and cause a short-circuit.

- Before commissioning, ensure that all seals and caps of the plug-in connections are leak-proof.

Incorrect connection wiring!
Risk of injury due to electric shock and malfunctions! The valve may only be connected by or under the supervision of a specialized electrician. The lines used have to be suitable for operating temperatures of -20 °C...+100 °C.

- De-energize the connection line before installation.
- Correctly connect the protective grounding conductor and the grounding.
- Ensure that there are no sharp bends in the connection line and braided wires to avoid short-circuits and interruptions.
- Cable and line entry must always be assembled according to the assembly instructions.
- During the assembly, ensure leak-tightness between connection line, cable and line entry.
- Only use connection lines which comply with the requirements specified in the data sheet.

Electro-magnetic processes!
Hydraulic valves with electronics components may cause interferences at other electronics components due to electro-magnetic radiation. This can lead to uncontrolled motion at the system.

- Observe the limit values for electro-magnetic radiation and shield any other electronic components as necessary.

⚠ CAUTION

Electro-magnetic processes!
Hydraulic valves with electronic components can be disturbed by electro-magnetic radiation from unshielded connection lines. This can lead to uncontrolled motion at the system.

- Comply with EMC limit values. Only use recommended electrical connection lines according to the EMC Directive and shield the valve electronics if necessary.
- Ensure sufficient distance between the valve electronics and power-current lines or frequency converters. If necessary install shielding. Ensure EMC-compliant wiring.

NOTICE

Missing seals and caps!
Loss of protection class IP65 and risk of short circuit. Liquids and foreign particles may penetrate and damage the valve.

- Before assembly, ensure that all seals and caps of the plug-in connections are tight.

Plugging or unplugging connectors while energized!
The valve might be destroyed.

- Switch off the power supply to the relevant system part before assembling the valve or when connecting and disconnecting connectors.

- Ensure a maintenance-friendly installation, i.e. simple access to the connection lines. Free access to the connection sides must be guaranteed.
- Before installation note down the information on the name plate. If after the installation, name plates are not visible or readable any more, this data will be quickly available to you at any time.

Voltage supply

As supply voltage of the valve, functional low voltages with electric separation (PELV or SELV) according to VDE0100, part 410 must be used.
For the external voltage supply, it must be ensured that, even in error cases, the voltage limitation defined for the valve is not exceeded. PELV power supply units according to EN 60204, section 6.4.2 comply with these requirements.

- Only connect voltages and electric circuits provided with safe isolation from dangerous voltages. Safe isolation can be achieved with isolation transformers, safe optocouplers or mains-free battery operation.
  When calculating the PFH (probability of dangerous failure per hour) of the safety function, the PFH of the external voltage supply must also be taken into account.

- Keep the connection as short as possible. Please observe the detailed information on voltage supply in the respective valve data sheet.

General information for wiring

- Do not pass the signal lines through strong magnetic fields.
- Lay signal lines as continuously as possible. If intermediate terminals are required, use a terminal block with shield strip. Load lines consisting of two individual wires (e.g. voltage supply) must be laid in parallel or twisted.
- Cables should have the actually required number of wires only. If this is not possible, the unused wires have to be connected with each other and then to the ground on one side in the control cabinet.

Troubleshooting the system

In case of faulty IO-Link interface signals, please refer to troubleshooting of other electric components, e.g. as follows:

- Switched inductivities:
  - DC: antiparallel free-wheeling diode over actuator winding
  - AC: type-related R/C combination over actuator winding.
- Electric motors
  - R/C combination from each motor winding to ground.
- Frequency converter
  - Inlet filter in the voltage supply of the frequency converter
  - Motor control line shielded and laid separately from other lines, and/or output filter for motor lines.
  - Extensive contact of the FU housing with the rear wall of the control cabinet

7.7.4 Altitude of the valve with IO-Link interface

For safety-relevant applications, the intended altitude of the valve is limited to 2000 m. Higher altitudes are not admissible.

8 Commissioning

⚠ WARNING

Faulty assembly, leaking hydraulic fluid!
Carelessly or incorrectly mounted valves may become loose during operation, fall down and cause serious injuries. A powerful hydraulic fluid jet may leak at incompletely mounted hydraulic connections and connection lines and cause serious injuries.

- Only commission the system after all hydraulic connections and the valve have been completely and properly mounted according to the specifications.
- Look out for defective sealing points and exchange defective seal rings immediately.
- Wear personal protective equipment during the initial commissioning.

Inadmissibly high operating pressure!
In hydraulic applications with different area ratios, the hydraulic pressure is fortified and may - in case of incorrect design - lead to exceedance of the maximum admissible operating pressure. Valves may burst, or the cap elements may fly around and cause serious injuries.

- Ensure before the commissioning of the hydraulic system that the maximum admissible pressure of the valve in the system is not exceeded by any means.
- Ensure that in your system, the maximum admissible operating pressure is secured by means of a pressure relief valve.

Commissioning by persons without the required knowledge!
Danger of damage to property and personal injuries. Commissioning of the valve requires basic hydraulic and electrical/electronical knowledge.

- The valve may only be commissioned by qualified staff.

8.1 First commissioning

- Prior to commissioning, make sure that all electrical and hydraulic connections are either used or covered. Commission the product only if it is installed completely.
- Make sure that only hydraulic fluid specified in the valve data sheet is used.
- Allow the valve to acclimatize for some time prior to commissioning as the electronics might be damaged by the generation of condensed water.
- Immediately depressurize the system if hydraulic fluid still leaks despite proper assembly and continue with chapter 14 "Troubleshooting".

Bleeding the hydraulic system

Bleeding of the valve is usually not necessary. However, Bosch Rexroth recommends bleeding the entire hydraulic system. The following points must be observed:

- Before actual operation, switch the valve several times with reduced pressure (50% operating pressure). This will expel any remaining air from the valve.

NOTICE! Damage of the valve and the system! Do not switch the valve under operating pressure as long as the system has not been bled!

Performing the leak test

Ensure that no hydraulic fluid leaks at the connections during operation.

Performing the functional test

If possible, check hydraulic functions in a controlled way and at low pressure first. Observe the operating instructions of the hydraulic system into which the valve is installed.

9 Operation

During normal operation, the user does not need to intervene.
In case of power failure during operation, the valve may be switched on again without any further measures. It is immediately ready for operation.

10 Maintenance and repair

Bosch Rexroth valves are usually maintenance-free.
The valve seals are subject to a process of natural wear and aging. It is therefore recommended to replace the valves at appropriate time intervals. The intervals are mainly determined by the operating conditions and the cleanliness of the hydraulic fluid.

- Regularly check the product and mounting surfaces for leak-tightness!
- As a precaution, exchange seals at reasonable time intervals.
  Preventative maintenance (e.g.: hydraulic fluid care) as well as compliance with the pressure and temperature specifications extend the life cycle of the valve, system and hydraulic fluid.

10.1 Cleaning and care

NOTICE

Penetrating dirt and humidity!
Operating failures.
- Always ensure absolute cleanliness when working at the valve!
- Only use a dry and dust-free cloth for all cleaning works.

Solvents and aggressive cleaning agents!
Damage and quicker aging of the valve.
- Do not use aggressive cleaning agents; only use a dry and dust-free cloth for all cleaning works.

For cleaning and maintenance proceed as follows:
- Perform a visual inspection and check the tight seat of all lines and screws.
- Check all plug-in and clamping connections of the valve for correct seat and damage at least once a year.
- Check the lines for breaks and crushes. Have damaged or defective lines exchanged immediately!
- Clean housing parts with a dry and dust-free cloth.

10.2 Inspection and maintenance

⚠ WARNING

Dirt and foreign particles in the valve!
Penetrating dirt and foreign particles in the valve lead to wear and malfunctions. Safe function of the valve can no longer be ensured.
- During assembly, ensure utmost cleanliness in order to prevent foreign particles such as welding beads or metal chips from getting into the hydraulic lines.
- Do not use linting fabric for cleaning.
- Ensure that no cleaning agents are able to enter the hydraulic fluid.
- Flush the hydraulic system if necessary. Replace the fluid filter or the hydraulic fluid.

10.3 Repair

The valve with IO-Link interface may only be replaced as complete unit.
For safety-related reasons, Unauthorized modification of the valve is not allowed!
Repair and maintenance works may only be performed by Bosch Rexroth AG.
For repair and maintenance works, send the unit to the service address specified in chapter 16.1.
Devices returned to Bosch Rexroth for repair should be sent in the original packaging.
Repaired devices are returned with default settings.
User-specific settings will not be applied. The machine end-user must transfer all appropriate user parameters and programs again.

Correcting leakage at the mounting surface

- Remove the safety valve, see chapter 11 "Disassembly and replacement".
- Check the seal ring recesses on the connection surface for cleanliness and intactness.
- Dry the component connection surface and the component contact surface using suitable cleaning materials.
- Install new seals.
- Re-assemble the valve at the contact surface, see chapter 7 "Assembly".

11 Disassembly and replacement

11.1 Required tools

No special tools are required for disassembly.

11.2 Preparing disassembly

⚠ WARNING

Risk of injury when disassembling under pressure and with electrical voltage applied!

If you do not de-pressurize and de-energize the system prior to the start of disassembly, you may get injured and the product or system parts may be damaged!

- Decommission the overall system as described in the overall system instructions.
- The system and all connected components must be brought into a safe state. In addition, the components must be switched off, depressurized, de-energized and secured against restarting.

⚠ CAUTION

Incompletely mounted valve components falling down!

Incompletely disassembled valve components may fall down and cause injuries.

- During disassembly, secure the valve against falling.

11.3 Disassembly process

Have sufficiently dimensioned collecting containers, non-linting cloth and medium-binding materials ready in order to collect or bind leaking hydraulic fluid.

1. De-energize and depressurize your system.
2. Unload the hydraulic accumulators, if applicable.

3. Switch off your system and separate the electric voltage supply and protect the system against restarting before all disassembly work.
4. Provide for a clean environment during the disassembly.
5. Prepare a container or a pan for collecting the leaking hydraulic fluid.
6. Only use suitable tools to loosen the mounting screws of the valve.
7. Remove the mounting screws and remove the valve from the valve contact surface.
8. Collect the escaping hydraulic fluid in the provided container and dispose of it properly.
9. Lift the valve from the installation position.
10. If the valve is to be returned to the manufacturer for repair, close the valve connection surface using the protective plate supplied or protect it using equivalent packaging in order to avoid contamination and damage.
11. Close the subplate in order to avoid contamination of your system.

In case of new installation and/or replacement of the hydraulic valve, please refer to chapter 7 "Installation".

11.4 Preparing storage and further use

To prepare the valve for storage and further use, proceed as follows:

- Only use the original packaging for storage.
- Comply with the admissible storage temperature range specified in chapter 6.1 "Storing the valve with IO-Link interface".
- Protect the valve from dust and humidity.

12 Disposal

12.1 Environmental protection

Careless disposal of the valve may cause environmental pollution.

- Dispose of the product therefore in accordance with the currently applicable national provisions in your country.
- Please observe the following information for environmentally-friendly disposal of the valve.

12.2 Return to Bosch Rexroth AG

The products manufactured by us can be returned to us for disposal purposes at no costs. There must be no inappropriate foreign substances or third-party components when products are returned. The components have to be sent free to the door to the following address:
Bosch Rexroth AG
Industrial Hydraulics Service
Bürgermeister-Dr.-Nebel-Straße 8
97816 Lohr am Main
Germany

12.3 Packaging

Upon request, reusable systems can be used for regular deliveries.
The materials for disposable packaging are mostly cardboard, wood, and expanded polystyrene. They can be recycled without any problems. Due to ecological reasons, disposable packaging should not be used for returning products to Bosch Rexroth.

12.4 Materials used

Hydraulic components from Bosch Rexroth do not contain any hazardous materials that could be released during intended use. Normally, no negative effects on human beings and on the environment have to be expected.
The valve basically consists of:
- Cast iron
- Steel
- Aluminum
- Copper
- Plastics
- Electronics components and assemblies
- Elastomers

12.5 Recycling

Due to the high share of metal, the products can mostly be recycled. In order to achieve an ideal metal recovery, disassembly into individual assemblies is required. The metals contained in electric and electronic assemblies can be recovered by means of special separation procedures as well. If the products contain batteries or accumulators, they have to be removed before recycling and furnished to the battery recycling, if possible.

13 Extension and modification

The valve with IO-Link interface must not be extended or modified. Modification of the valve will lead to expiry of warranty.

14 Troubleshooting

14.1 How to proceed for troubleshooting

- Always work systematically and purposefully, even when under time pressure. Random, thoughtless disassembly and changing of settings can, in the worst-case-scenario, result in the inability to determine the original cause of the error.
- First, get an overview of the functions of the valve in conjunction with the overall system.
- Try to find out whether the valve has worked properly in conjunction with the overall system before the error occurred.
- Try to determine any changes of the overall system in which the valve is integrated:
  - Were there any changes to the application conditions or area of application of the valve?
  - Were there any changes (e.g.: refitting) or repair works been carried out at the overall system (machine/system, electrical systems, control) or at the valve? If so: What were they?
  - Was the valve and/or the machine used as intended?
  - How did the fault become apparent?

- Try to get a clear idea of the cause of error. If necessary, ask the actual (machine) operator.

14.2 Fault table

The valve is usually not sensitive to faults if the prescribed application conditions and hydraulic fluid quality are complied with.

14.2.1 Mechanical faults

Table 10: Mech. fault table

Fault	Possible cause	Remedy
Valve does not switch	Insufficient pilot pressure	Check and/or reapply pressure at the ports.
	Control spool is jammed due to contamination	Remove valve and replace it with a new one.
	Electrical connection is disconnected	Check whether the electrical connectors are correctly and completely mounted.
		Check the error memory (see electrical errors)
	Connector defective or damaged	Replace the connector
External leakage	Seal at valve connection surface damaged	Remove the valve and replace the seals, see chapter 10.3 "Repair"
	Other leakage	Replace the valve

14.2.2 Electrical faults

Indicators and alarms

The valve with IO-Link interface is not equipped with safety-relevant indicators or alarms.

15 Technical data

For the technical data of the valve with IO-Link interface, please refer to the valve data sheet.

16 Appendix

16.1 List of addresses

Contacts for transport damage, repair and spare parts

Bosch Rexroth AG
Industrial Hydraulics Service
Bürgermeister-Dr.-Nebel-Straße 8
97816 Lohr am Main
Germany

Phone	+49 (0) 93 52/40 50 60
E-mail	service@boschrexroth.de

Ordering address for accessories and hydraulic valves

Headquarters:
Bosch Rexroth AG
Zum Eisengießer 1
97816 Lohr am Main
Germany

Phone	+49 (0) 93 52/40 30 20
E-mail	my.support@boschrexroth.com

The addresses of our sales and service network and sales organizations can be found at `www.boschrexroth.com/adressen`

17 Index

The Drive & Control Company

Rexroth
Bosch Group

Bosch Rexroth AG
Industrial Hydraulics
Zum Eisengießer 1
97816 Lohr a. Main
Germany
Tel: +49 (0) 9352/40 30 20
my.support@boschrexroth.com
www.boschrexroth.com

Subject to change without notice
Printed in Germany
RE 29118-B/02.2022